**Product data sheet**

# Automation technology - distributors, AS-interface

| | |
|---|---|
| Product description | **M12-A connecting cord, Contacts: 2, unshielded, moulded on cable, IP67, PUR black, 2 x 0.75 mm²** |
| Area | **M12-A series 775** |
| Order number | **79 6424 20 02** |

## Illustration

## Scale drawing

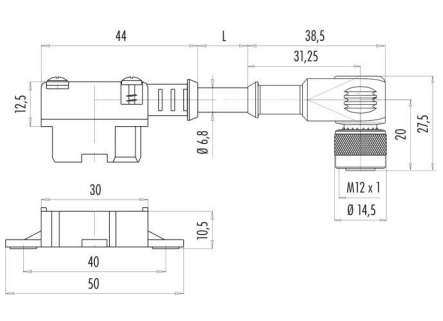


**You can find the component part drawing on the next page.**

# Technical data

## General values

| | |
|---|---|
| Connector design | connecting cord |
| Connector locking system | ribbon cable terminal |
| Termination | moulded on cable |
| Wire gauge (mm) | AS-Interface 1.50 mm² / 0.75 mm² |
| Wire gauge (AWG) | AS-Interface AWG 16/18 |
| Upper limit temperature | 70 °C |
| Lower limit temperature | -25 °C |
| Customs tariff number | 85444290 |

## Cable data

| | |
|---|---|
| Cable length | 2 m |
| Sheath material | PUR |
| Single-lead insulation | PVC |
| Halogen free | No |
| Single-lead structure | 24x0,195 mm |
| Cable diameter | 5.9 mm |
| Cable color | black |
| Conductor resistance | 26 |
| Temperature range, moving cable, °C from | -5°C |
| Temperature range, moving cable, °C to | +70°C |
| Temperature range, fixed cable, °C from | -25°C |
| Temperature range, fixed cable, °C to | +70°C |
| Bending radius, fixed cable | ≥ 3 x Ø |
| Bending radius, moving cable | ≥ 10 x Ø |

## Electrical values

| | |
|---|---|
| Rated current (40 °C) | 2 A (per contact) |
| Rated voltage | 30 V |
| Rated impulse voltage | 500 V |
| Pollution degree | 3 |
| Insulation resistance | ≥ $10^{10}$ Ω |
| EMC compliance | unshielded |
| Degree of protection | IP67 |

## Material

| | |
|---|---|
| Contact material | CuZn (brass) / CuSn (bronze) |
| Contact plating | Sn (tin)/Au (gold) |
| Contact body material | PA |
| Housing material | PA/PUR |
| REACH SVHC | CAS 7439-92-1 (Lead) |

# Automation technology - distributors, AS-interface

| | |
|---|---|
| Product description | **M12-A connecting cord, Contacts: 2, unshielded, moulded on cable, IP67, PUR black, 2 x 0.75 mm²** |
| Area | **M12-A series 775** |
| Order number | **79 6424 20 02** |

## Component part drawing

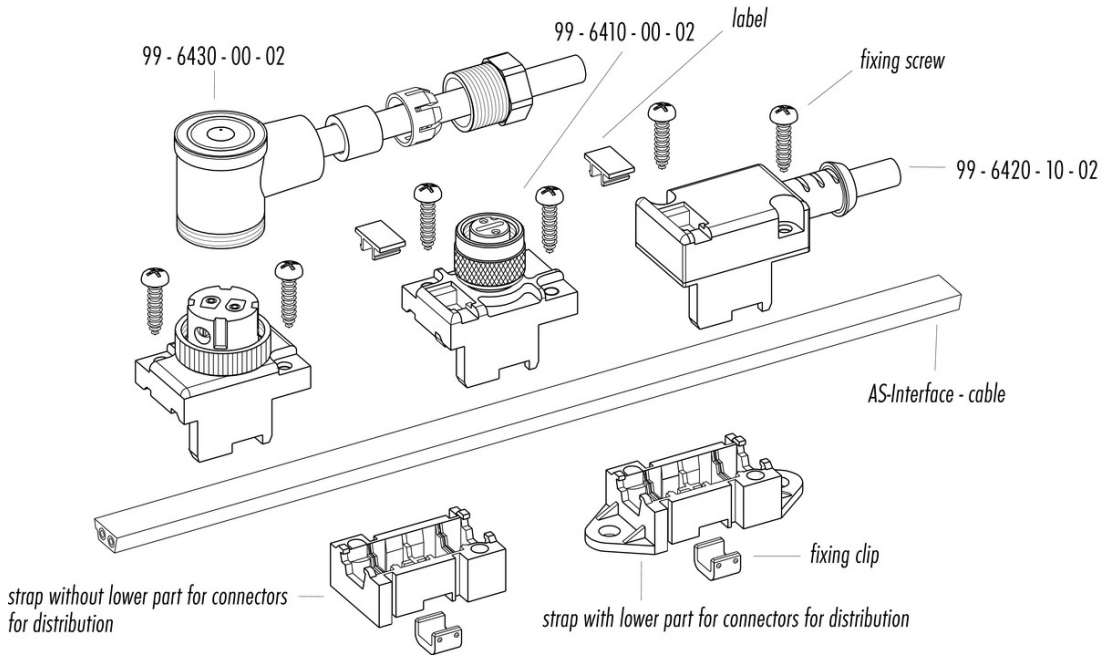

| | |
|---|---|
| Product description | **M12-A connecting cord, Contacts: 2, unshielded, moulded on cable, IP67, PUR black, 2 x 0.75 mm²** |
| Area | **M12-A series 775** |
| Order number | **79 6424 20 02** |

## Security notices

The connectors have been developed for applications in plant engineering, control and electrical equipment construction. The user is responsible for checking whether the connectors can also be used in other areas of application.
Plug connectors with enclosure protection IP 67 and IP 68 are not suitable for use under water. When used outdoors, the plug connectors must be protected separately against corrosion. For further information on the IP protection classes, please refer to the "Technical Information" download centre.