Product data sheet

Automation technology - distributors, AS-interface

Product description	**M12-A connecting cord, Contacts: 2, unshielded, moulded on cable, IP67, PUR black, 2 x 0.75 mm²**
Area	**M12-A series 775**
Order number	**79 6420 30 02**

Illustration

Scale drawing

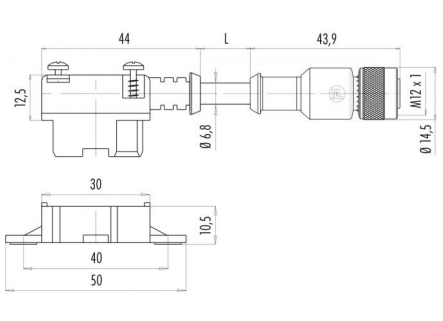

You can find the component part drawing on the next page.

Technical data

General values

Connector design	connecting cord
Connector locking system	ribbon cable terminal
Termination	moulded on cable
Wire gauge (mm)	AS-Interface 1.50 mm² / 0.75 mm²
Wire gauge (AWG)	AS-Interface AWG 16/18
Upper limit temperature	70 °C
Lower limit temperature	-25 °C
Customs tariff number	85444290

Cable data

Cable length	3 m
Sheath material	PUR
Single-lead insulation	PVC
Halogen free	No
Single-lead structure	24x0,195 mm
Cable diameter	5.9 mm
Cable color	black
Conductor resistance	26
Temperature range, moving cable, °C from	-5°C
Temperature range, moving cable, °C to	+70°C
Temperature range, fixed cable, °C from	-25°C
Temperature range, fixed cable, °C to	+70°C
Bending radius, fixed cable	≥ 3 x Ø
Bending radius, moving cable	≥ 10 x Ø

Electrical values

Rated current (40 °C)	2 A (per contact)
Rated voltage	30 V
Rated impulse voltage	500 V
Pollution degree	3
Insulation resistance	≥ 10^{10} Ω
EMC compliance	unshielded
Degree of protection	IP67

Material

Contact material	CuZn (brass) / CuSn (bronze)
Contact plating	Sn (tin)/Au (gold)
Contact body material	PA
Housing material	PA/PUR
REACH SVHC	CAS 7439-92-1 (Lead)

Automation technology - distributors, AS-interface

Product description	**M12-A connecting cord, Contacts: 2, unshielded, moulded on cable, IP67, PUR black, 2 x 0.75 mm²**
Area	**M12-A series 775**
Order number	**79 6420 30 02**

Component part drawing

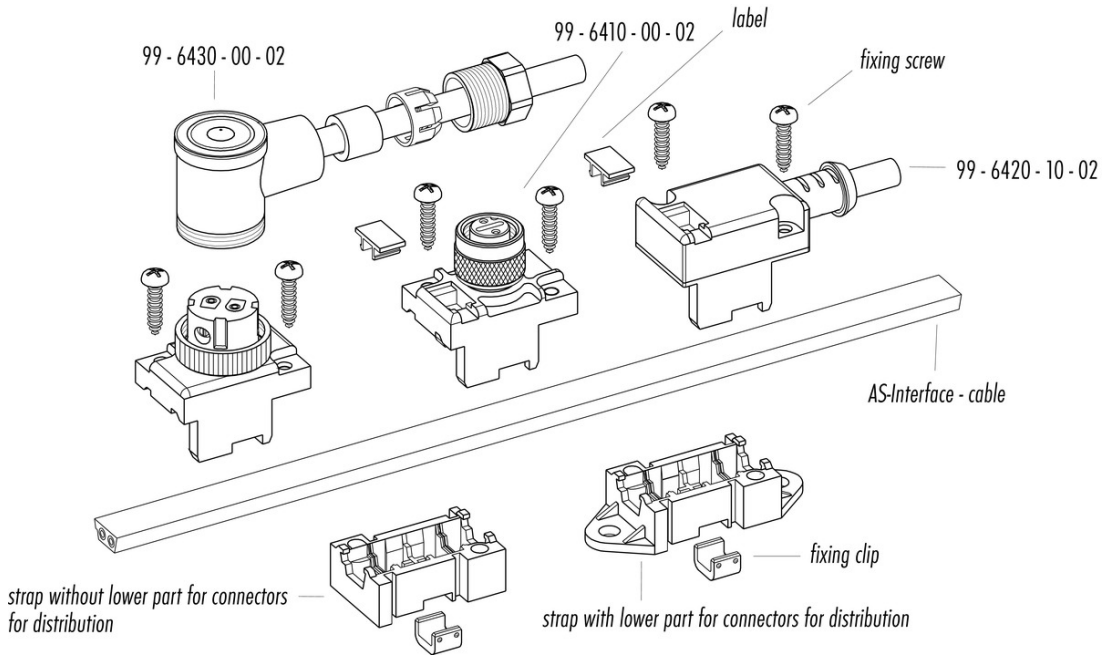

Product description	**M12-A connecting cord, Contacts: 2, unshielded, moulded on cable, IP67, PUR black, 2 x 0.75 mm²**
Area	**M12-A series 775**
Order number	**79 6420 30 02**

Security notices

The connectors have been developed for applications in plant engineering, control and electrical equipment construction. The user is responsible for checking whether the connectors can also be used in other areas of application.
Plug connectors with enclosure protection IP 67 and IP 68 are not suitable for use under water. When used outdoors, the plug connectors must be protected separately against corrosion. For further information on the IP protection classes, please refer to the "Technical Information" download centre.