Relay for control panel of 2c 7A and 4c 5A

HJ RELAYS

RoHS compliant

FEATURES

1. Economical prices achieved

2. Useful for wide range of applications

Gold-plated contact types are capable of switching under low level (1mA: reference value) to powerful high level (7A: 2-pole) loads.

3. Wide range of types available

The lineup includes 2-pole and 4-pole products, relays with operating indicator lights, and push-button types. You will also find relays that absorb surge when the coil goes to the off state with diodes (for DC type) or CR circuits (for AC type). Moreover, the availability of a broad range of coil voltages meets a wide range of needs.

4. Sockets and terminal sockets are available.

TYPICAL APPLICATIONS

Control panels
Power supply units
Molding machines
Machine tools
Welding equipment
Agricultural equipment
Office equipment
Vending machines
Communications equipment
Amusement machines

ORDERING INFORMATION

HJ ☐ - ☐ - ☐ - ☐ - ☐ - ☐

Contact arrangement
2: 2 Form C
4: 4 Form C

Operation indication
Nil: Without LED indication
L: With LED indication

Test button
Nil: Without a test button
T: With a test button

Nominal coil voltage
AC 12, 24, 48, 100, 120, 200, 220/240 V
DC 12, 24, 48, 110 V

Surge suppression
Nil: Without
D: With diode
R: With CR circuit

Contact surface
Nil: Without Au plating
6: With Au plating

Notes: 1. Certified by UL/C-UL and TÜV
2. The LED indication color is green for the DC coil and red for the AC coil.

© Panasonic Corporation 2014

TYPES

1. Au plating type

1) Plug-in type

Nominal coil voltage	2 Form C	4 Form C
	Part No.	Part No.
12V DC	HJ2-DC 12V-6	HJ4-DC 12V-6
24V DC	HJ2-DC 24V-6	HJ4-DC 24V-6
48V DC	HJ2-DC 48V-6	HJ4-DC 48V-6
100/110V DC	HJ2-DC110V-6	HJ4-DC110V-6
12V AC	HJ2-AC 12V-6	HJ4-AC 12V-6
24V AC	HJ2-AC 24V-6	HJ4-AC 24V-6
48V AC	HJ2-AC 48V-6	HJ4-AC 48V-6
100/110V AC	HJ2-AC100V-6	HJ4-AC100V-6
110/120V AC	HJ2-AC120V-6	HJ4-AC120V-6
200/220V AC	HJ2-AC200V-6	HJ4-AC200V-6
220/240V AC	HJ2-AC220/240V-6	HJ4-AC220/240V-6

Standard packing: Carton: 20 pcs.; Case: 200 pcs.

2) Plug-in type (with LED indication)

Nominal coil voltage	2 Form C	4 Form C
	Part No.	Part No.
12V DC	HJ2-L-DC 12V-6	HJ4-L-DC 12V-6
24V DC	HJ2-L-DC 24V-6	HJ4-L-DC 24V-6
48V DC	HJ2-L-DC 48V-6	HJ4-L-DC 48V-6
100/110V DC	HJ2-L-DC110V-6	HJ4-L-DC110V-6
12V AC	HJ2-L-AC 12V-6	HJ4-L-AC 12V-6
24V AC	HJ2-L-AC 24V-6	HJ4-L-AC 24V-6
48V AC	HJ2-L-AC 48V-6	HJ4-L-AC 48V-6
100/110V AC	HJ2-L-AC100V-6	HJ4-L-AC100V-6
110/120V AC	HJ2-L-AC120V-6	HJ4-L-AC120V-6
200/220V AC	HJ2-L-AC200V-6	HJ4-L-AC200V-6
220/240V AC	HJ2-L-AC220/240V-6	HJ4-L-AC220/240V-6

Standard packing: Carton: 20 pcs.; Case: 200 pcs.

3) Plug-in type (with diode)

Nominal coil voltage	2 Form C	4 Form C
	Part No.	Part No.
12V DC	HJ2-DC 12V-D-6	HJ4-DC 12V-D-6
24V DC	HJ2-DC 24V-D-6	HJ4-DC 24V-D-6
48V DC	HJ2-DC 48V-D-6	HJ4-DC 48V-D-6
100/110V DC	HJ2-DC110V-D-6	HJ4-DC110V-D-6

Standard packing: Carton: 20 pcs.; Case: 200 pcs.

4) Plug-in type (with diode and LED indication)

Nominal coil voltage	2 Form C	4 Form C
	Part No.	Part No.
12V DC	HJ2-L-DC 12V-D-6	HJ4-L-DC 12V-D-6
24V DC	HJ2-L-DC 24V-D-6	HJ4-L-DC 24V-D-6
48V DC	HJ2-L-DC 48V-D-6	HJ4-L-DC 48V-D-6
100/110V DC	HJ2-L-DC110V-D-6	HJ4-L-DC110V-D-6

Standard packing: Carton: 20 pcs.; Case: 200 pcs.

5) Plug-in type (with CR)

Nominal coil voltage	2 Form C	4 Form C
	Part No.	Part No.
100/110V AC	HJ2-AC100V-R-6	HJ4-AC100V-R-6
110/120V AC	HJ2-AC120V-R-6	HJ4-AC120V-R-6
200/220V AC	HJ2-AC200V-R-6	HJ4-AC200V-R-6
220/240V AC	HJ2-AC220/240V-R-6	HJ4-AC220/240V-R-6

Standard packing: Carton: 20 pcs.; Case: 200 pcs.

6) Plug-in type (with CR and LED indication)

Nominal coil voltage	2 Form C	4 Form C
	Part No.	Part No.
100/110V AC	HJ2-L-AC100V-R-6	HJ4-L-AC100V-R-6
110/120V AC	HJ2-L-AC120V-R-6	HJ4-L-AC120V-R-6
200/220V AC	HJ2-L-AC200V-R-6	HJ4-L-AC200V-R-6
220/240V AC	HJ2-L-AC220/240V-R-6	HJ4-L-AC220/240V-R-6

Standard packing: Carton: 20 pcs.; Case: 200 pcs.

2. Without Au plating type

1) Plug-in type

Nominal coil voltage	2 Form C	4 Form C
	Part No.	Part No.
12V DC	HJ2-DC 12V	HJ4-DC 12V
24V DC	HJ2-DC 24V	HJ4-DC 24V
48V DC	HJ2-DC 48V	HJ4-DC 48V
100/110V DC	HJ2-DC110V	HJ4-DC110V
12V AC	HJ2-AC 12V	HJ4-AC 12V
24V AC	HJ2-AC 24V	HJ4-AC 24V
48V AC	HJ2-AC 48V	HJ4-AC 48V
100/110V AC	HJ2-AC100V	HJ4-AC100V
110/120V AC	HJ2-AC120V	HJ4-AC120V
200/220V AC	HJ2-AC200V	HJ4-AC200V
220/240V AC	HJ2-AC220/240V	HJ4-AC220/240V

Standard packing: Carton: 20 pcs.; Case: 200 pcs.

2) Plug-in type (with LED indication)

Nominal coil voltage	2 Form C	4 Form C
	Part No.	Part No.
12V DC	HJ2-L-DC 12V	HJ4-L-DC 12V
24V DC	HJ2-L-DC 24V	HJ4-L-DC 24V
48V DC	HJ2-L-DC 48V	HJ4-L-DC 48V
100/110V DC	HJ2-L-DC110V	HJ4-L-DC110V
12V AC	HJ2-L-AC 12V	HJ4-L-AC 12V
24V AC	HJ2-L-AC 24V	HJ4-L-AC 24V
48V AC	HJ2-L-AC 48V	HJ4-L-AC 48V
100/110V AC	HJ2-L-AC100V	HJ4-L-AC100V
110/120V AC	HJ2-L-AC120V	HJ4-L-AC120V
200/220V AC	HJ2-L-AC200V	HJ4-L-AC200V
220/240V AC	HJ2-L-AC220/240V	HJ4-L-AC220/240V

Standard packing: Carton: 20 pcs.; Case: 200 pcs.

3) Plug-in type (with a test button)

Nominal coil voltage	2 Form C	4 Form C
	Part No.	Part No.
12V DC	HJ2-T-DC 12V	HJ4-T-DC 12V
24V DC	HJ2-T-DC 24V	HJ4-T-DC 24V
100/110V AC	HJ2-T-AC100V	HJ4-T-AC100V
200/220V AC	HJ2-T-AC200V	HJ4-T-AC200V

Standard packing: Carton: 20 pcs.; Case: 200 pcs.

4) Plug-in type (with LED indication and a test button)

Nominal coil voltage	2 Form C	4 Form C
	Part No.	Part No.
12V DC	HJ2-L-T-DC 12V	HJ4-L-T-DC 12V
24V DC	HJ2-L-T-DC 24V	HJ4-L-T-DC 24V
100/110V AC	HJ2-L-T-AC100V	HJ4-L-T-AC100V
200/220V AC	HJ2-L-T-AC200V	HJ4-L-T-AC200V

Standard packing: Carton: 20 pcs.; Case: 200 pcs.

© Panasonic Corporation 2014

5) Plug-in type (with diode)

Nominal coil voltage	2 Form C	4 Form C
	Part No.	Part No.
12V DC	HJ2-DC 12V-D	HJ4-DC 12V-D
24V DC	HJ2-DC 24V-D	HJ4-DC 24V-D
48V DC	HJ2-DC 48V-D	HJ4-DC 48V-D
100/110V DC	HJ2-DC110V-D	HJ4-DC110V-D

Standard packing: Carton: 20 pcs.; Case: 200 pcs.

6) Plug-in type (with diode and LED indication)

Nominal coil voltage	2 Form C	4 Form C
	Part No.	Part No.
12V DC	HJ2-L-DC 12V-D	HJ4-L-DC 12V-D
24V DC	HJ2-L-DC 24V-D	HJ4-L-DC 24V-D
48V DC	HJ2-L-DC 48V-D	HJ4-L-DC 48V-D
100/110V DC	HJ2-L-DC110V-D	HJ4-L-DC110V-D

Standard packing: Carton: 20 pcs.; Case: 200 pcs.

7) Plug-in type (with CR)

Nominal coil voltage	2 Form C	4 Form C
	Part No.	Part No.
100/110V AC	HJ2-AC100V-R	HJ4-AC100V-R
110/120V AC	HJ2-AC120V-R	HJ4-AC120V-R
200/220V AC	HJ2-AC200V-R	HJ4-AC200V-R
220/240V AC	HJ2-AC220/240V-R	HJ4-AC220/240V-R

Standard packing: Carton: 20 pcs.; Case: 200 pcs.

8) Plug-in type (with CR and LED indication)

Nominal coil voltage	2 Form C	4 Form C
	Part No.	Part No.
100/110V AC	HJ2-L-AC100V-R	HJ4-L-AC100V-R
110/120V AC	HJ2-L-AC120V-R	HJ4-L-AC120V-R
200/220V AC	HJ2-L-AC200V-R	HJ4-L-AC200V-R
220/240V AC	HJ2-L-AC220/240V-R	HJ4-L-AC220/240V-R

Standard packing: Carton: 20 pcs.; Case: 200 pcs.

RATING

1. Coil data

1) AC coils (50/60Hz)

Nominal coil voltage	Pick-up voltage (at 20°C 68°F)	Drop-out voltage (at 20°C 68°F)	Nominal coil current [±20%]		Nominal operating power		Max. applied voltage (at 70°C 158°F)
			50Hz	60Hz	50Hz	60Hz	
12V AC	80%V or less of nominal voltage (Initial)	30%V or more of nominal voltage (Initial)	102.9mA	85.4mA	Approx. 1.2 to 1.5 V A	Approx. 1.0 to 1.3 V A	110%V of nominal voltage
24V AC			54.5mA	45.6mA			
48V AC			30.7mA	25.9mA			
100/110V AC			11.8mA/13.9mA	10.0mA/11.6mA			
110/120V AC			10.9mA/12.5mA	9.1mA/10.3mA			
200/220V AC			6.8mA/8.1mA	5.7mA/6.7mA			
220/240V AC			6.8mA/7.8mA	5.6mA/6.4mA			

2) DC coils

Nominal coil voltage	Pick-up voltage (at 20°C 68°F)	Drop-out voltage (at 20°C 68°F)	Nominal coil current	Coil resistance (at 20°C 68°F)	Nominal operating power	Max. applied voltage (at 70°C 158°F)
12V DC	80%V or less of nominal voltage (Initial)	10%V or more of nominal voltage (Initial)	75mA [±10%]	160Ω	0.9W	110%V of nominal voltage
24V DC			37mA [±10%]	650Ω		
48V DC			18mA [±15%]	2,600Ω		
100/110V DC			9.1mA/10mA [±15%]	11,000Ω	1.1W	

© Panasonic Corporation 2014

2. Specifications

Characteristics	Item		Specifications	
Contact	Arrangement		2 Form C	4 Form C
	Contact resistance (Initial)		Max. 50 mΩ (By voltage drop 6 V DC 1A)	
	Contact material		Au plating type: Au plating Ag Without Au plating type: Ag	
Rating	Nominal switching capacity (resistive load)		7 A 250V AC, 7 A 30V DC	5 A 250V AC, 5 A 30V DC
	Max. switching power (resistive load)		1,750 VA	1,250 VA
	Max. switching voltage		250V AC, 125V DC	
	Max. switching current*4		7 A	5 A
	Nominal operating power		0.9W 1.2 VA	
	Min. switching capacity (Reference value)*1	Au plating type	1mA 1V DC	
		Without Au plating type	1mA 5V DC	
Electrical characteristics	Insulation resistance (Initial)		Min. 100MΩ (at 500V DC) Measurement at same location as “Breakdown voltage” section.	
	Breakdown voltage (Initial)	Between open contacts	1,000 Vrms for 1min. (Detection current: 10mA.)	
		Between contact sets	2,000 Vrms for 1min. (Detection current: 10mA.)	
		Between contact and coil	2,000 Vrms for 1min. (Detection current: 10mA.)	
	Temperature rise (coil) (at 70°C 158°F)		Max. 60°C 140°F (By resistive method, nominal coil voltage)	
	Operate time*2		Max. 20ms (Nominal coil voltage applied to the coil, excluding contact bounce time.)	
	Release time*2		Max. 20ms (Nominal coil voltage applied to the coil, excluding contact bounce time.) (without diode)	
Mechanical characteristics	Shock resistance	Functional	Min. 100 m/s² (Half-wave pulse of sine wave: 11 ms; detection time: 10μs.)	
		Destructive	Min. 1,000 m/s² (Half-wave pulse of sine wave: 6 ms.)	
	Vibration resistance	Functional	10 to 55 Hz at double amplitude of 1.0 mm (Detection time: 10μs.)	
		Destructive	10 to 55 Hz at double amplitude of 1.0 mm	
Expected life	Mechanical		Min. 2×10^7 (at 180 times/min.)	
	Electrical (resistive load) (at 20 times/min.)		Min. 10^5 (7A 250V AC) Min. 5×10^5 (5A 250V AC) Min. 10^5 (7A 30V DC)	Min. 10^5 (5A 250V AC) Min. 2×10^5 (3A 250V AC) Min. 10^5 (5A 30V DC)
Conditions	Conditions for operation, transport and storage*3 (Not freezing and condensing at low temperature)		Ambient temperature: –40°C to +70°C –40°F to +158°F Humidity: 5 to 85% R.H. (Not freezing and condensing at low temperature)	
	Max. Operating speed		20 times/min. (at nominal switching capacity)	
Unit weight			Approx. 34g 1.20 oz	

Notes: In accordance with the Electrical Appliance and Material Safety Law, you cannot exceed a voltage of 150V AC when using the 4 Form C type.
For more information, please inquire.
When using low level loads, contact instability may result depending on conditions of use (switching frequency and ambient conditions, etc.); therefore, please use the Au plating type.

*1. This value can change due to the switching frequency, environmental conditions and desired reliability level, therefore it is recommended to check this with the actual load.
*2. For the AC coil types, the operate/release time will differ depending on the phase.
*3. The upper limit of the ambient temperature is the maximum temperature that can satisfy the coil temperature rise value. Refer to Usage, transport and storage conditions in NOTES.
*4. When using the socket and terminal socket, be sure to verify the max. continuous current.

REFERENCE DATA

1-(1). Max. switching capacity (2 Form C type)

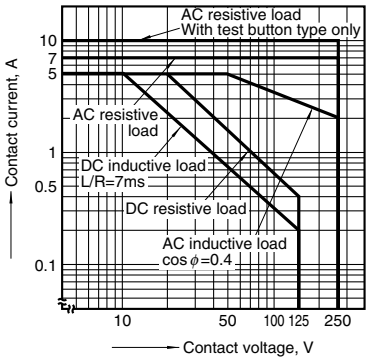

1-(2). Max. switching capacity (4 Form C type)

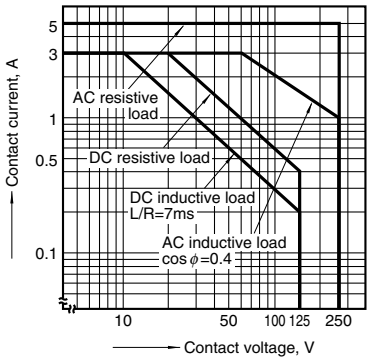

2-(1). Life curve (2 Form C)

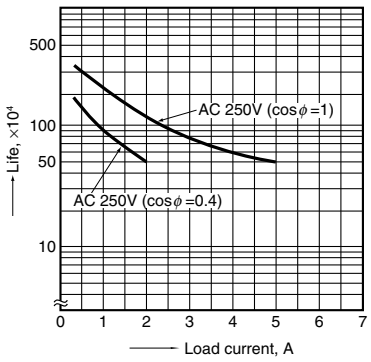

© Panasonic Corporation 2014

2-(2). Life curve (4 Form C)

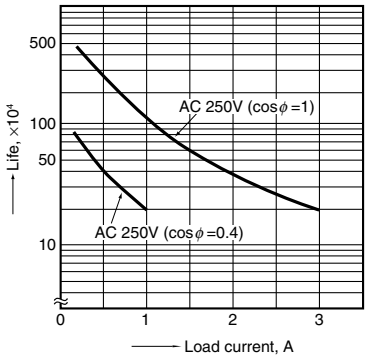

3-(1). Coil temperature rise (2 Form C/AC type)
Measured portion: Inside the coil
Ambient temperature: 70°C 158°F

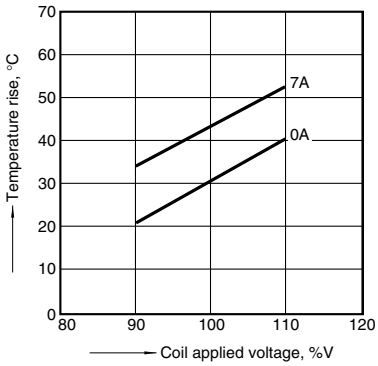

3-(2). Coil temperature rise (2 Form C/DC type)
Measured portion: Inside the coil
Ambient temperature: 70°C 158°F

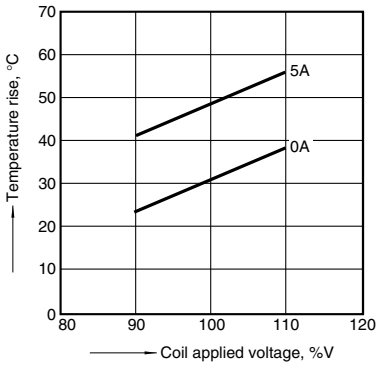

3-(3). Coil temperature rise (4 Form C/AC type)
Measured portion: Inside the coil
Ambient temperature: 70°C 158°F

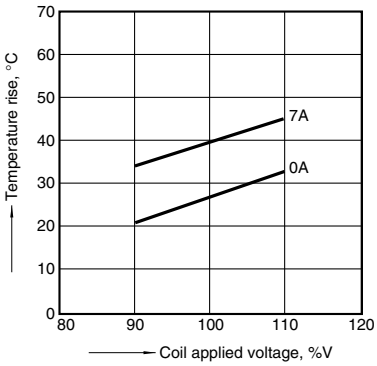

3-(4). Coil temperature rise (4 Form C/DC type)
Measured portion: Inside the coil
Ambient temperature: 70°C 158°F

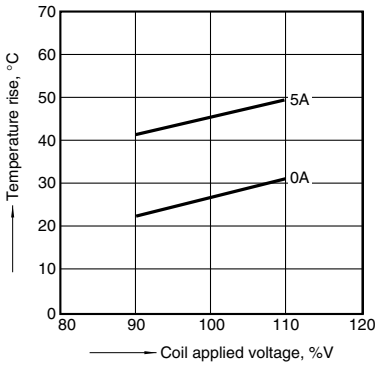

4-(1). AC coil surge voltage waveform (With CR circuit)
Tested sample: HJ4-AC200V-R

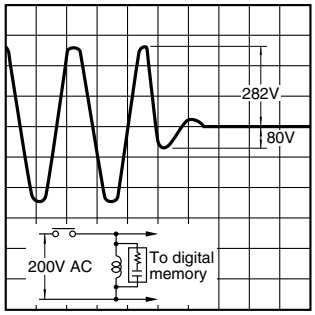

4-(2). AC coil surge voltage waveform (Without CR circuit)
Tested sample: HJ4-AC200V

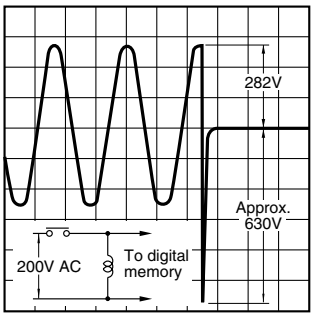

5-(1). DC coil surge voltage waveform (Without diode)

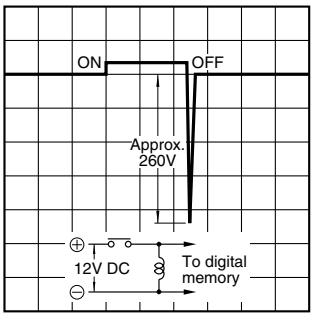

5-(2). DC coil surge voltage waveform (With diode)
Diode characteristics:
Reverse breakdown voltage: 1,000 V
Forward current: 1 A

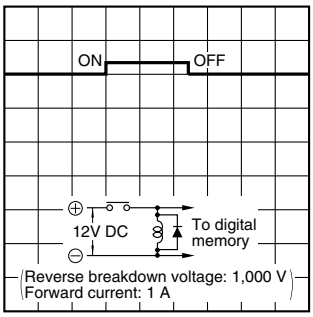

© Panasonic Corporation 2014

DIMENSIONS (mm inch)

The CAD data of the products with a CAD Data mark can be downloaded from: http://industrial.panasonic.com/ac/e/

1. Plug-in type (2 Form C) (including diode/CR)

CAD Data

External dimensions

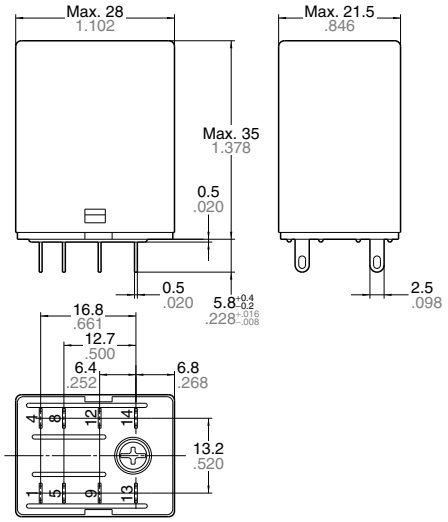

Schematic (Bottom view)

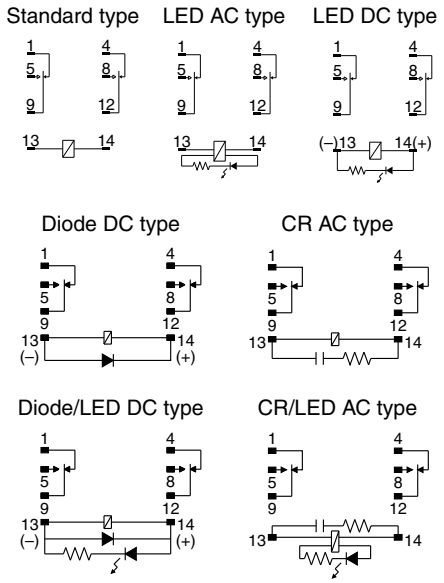

Dimension:	Tolerance
Less than 1mm .039inch:	±0.1 ±.004
Min. 1mm .039inch less than 3mm .118 inch:	±0.2 ±.008
Min. 3mm .118 inch:	±0.3 ±.012

2. Plug-in type (4 Form C) (including diode/CR)

CAD Data

External dimensions

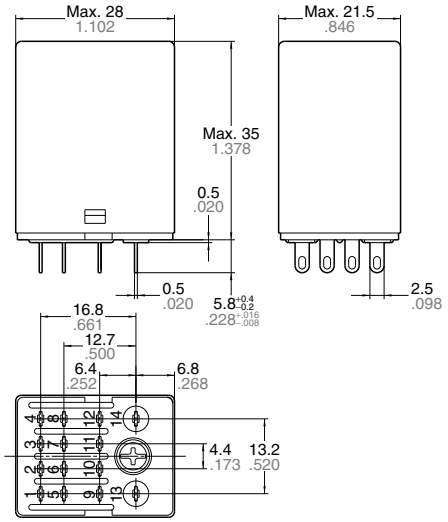

Schematic (Bottom view)

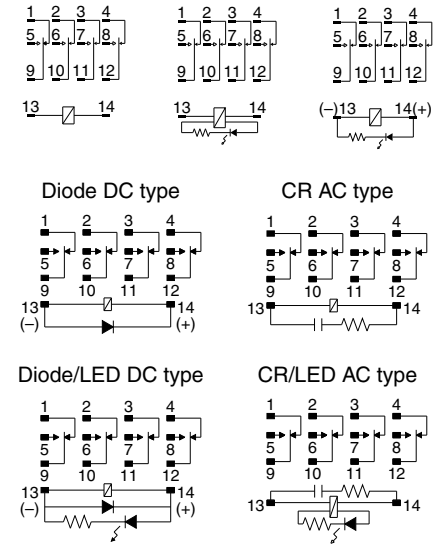

Dimension:	Tolerance
Less than 1mm .039inch:	±0.1 ±.004
Min. 1mm .039inch less than 3mm .118 inch:	±0.2 ±.008
Min. 3mm .118 inch:	±0.3 ±.012

© Panasonic Corporation 2014

3. Plug-in type with a test button (2 Form C)

CAD Data

External dimensions

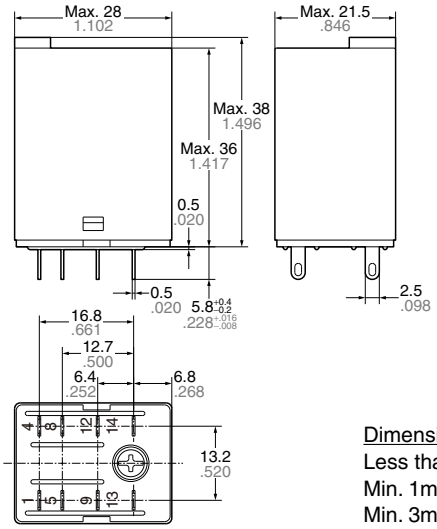

Schematic (Bottom view)

Standard type

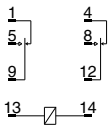

LED AC type

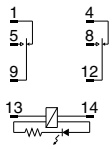

LED DC type

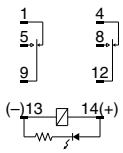

Dimension:	Tolerance
Less than 1mm .039inch:	±0.1 ±.004
Min. 1mm .039inch less than 3mm .118 inch:	±0.2 ±.008
Min. 3mm .118 inch:	±0.3 ±.012

4. Plug-in type with a test button (4 Form C)

CAD Data

External dimensions

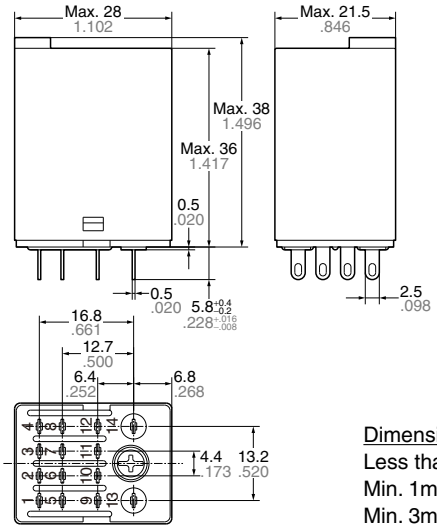

Schematic (Bottom view)

Standard type

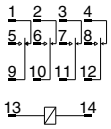

LED AC type

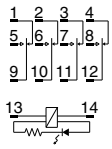

LED DC type

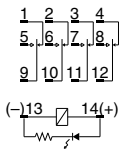

Dimension:	Tolerance
Less than 1mm .039inch:	±0.1 ±.004
Min. 1mm .039inch less than 3mm .118 inch:	±0.2 ±.008
Min. 3mm .118 inch:	±0.3 ±.012

SAFETY STANDARDS

	File No.	Certification authority: UL/C-UL	File No.	Certification authority: TÜV
2 Form C	E43149*	7A 250V AC, 7A 30V DC	R50049126	7A 250V AC (cosϕ=1.0), 7A 30V DC (0ms) Test button type: 10A 250V AC (cosϕ=1.0), 10A 30V DC (0ms)
4 Form C	E43149*	5A 250V AC, 5A 30V DC	R50049126	5A 250V AC (cosϕ=1.0), 5A 30V DC (0ms)

* CSA standard: Certified by C-UL

© Panasonic Corporation 2014

NOTES

1. For cautions for use, please read "General Application Guidelines".

2. Coil applied voltage

Please refer to "RATING" about coil input power supply.

3. LED display

Operation is displayed by the light emitted from the LED. The LED may remain briefly lit if voltage remains after the relay opens.

4. Switching lifetime

The switching lifetime is defined under the standard test condition specified in the JIS* C 5442 standard (temperature 15 to 35°C 59 to 95°F, humidity 25 to 75%). Check this with the real device as it is affected by coil driving circuit, load type, activation frequency, activation phase,ambient conditions and other factors.

Also, be especially careful of loads such as those listed below.

1) When used for AC load-operating and the operating phase is synchronous.
Rocking and fusing can easily occur due to contact shifting.

2) High-frequency load-operating
When high-frequency opening and closing of the relay is performed with a load that causes arcs at the contacts, nitrogen and oxygen in the air is fused by the arc energy and HNO_3 is formed. This can corrode metal materials.
Three countermeasures for these are listed here.
(1) Incorporate an arc-extinguishing circuit.
(2) Lower the operating frequency
(3) Lower the ambient humidity

5. Usage, transport and storage conditions

1) Temperature, humidity and pressure during usage, storage and transport
(1) Temperature:
–40 to +70°C –40 to +158°F
(2) Humidity: 5 to 85% RH
(Avoid freezing and condensation.)
The humidity range varies with the temperature. Use within the range indicated in the graph below.
Temperature and humidity range for usage, transport, and storage

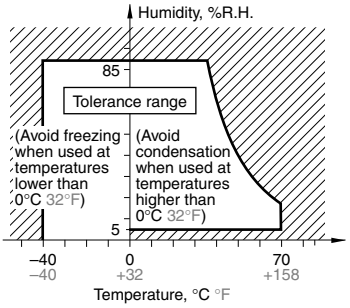

(3) Atmospheric pressure: 86 to 106 kPa

2) Condensation
Condensation forms when there is a sudden change in temperature under high temperature and high humidity conditions. Condensation will cause deterioration of the relay insulation.

3) Freezing
Condensation or other moisture may freeze on the relay when the temperatures is lower than 0°C 32°F. This causes problems such as sticking of movable parts or operational time lags.

4) Low temperature, low humidity environments
The plastic becomes brittle if the relay is exposed to a low temperature, low humidity environment for long periods of time.

6. Operation method for test button

1) Push and release ① gently to confirm relay switching.

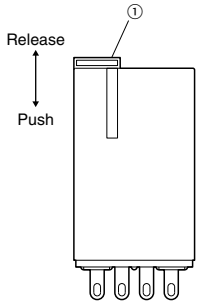

2) To lock to one side turn 90° counter-clockwise while pushing lock and turn 90° clockwise to release.

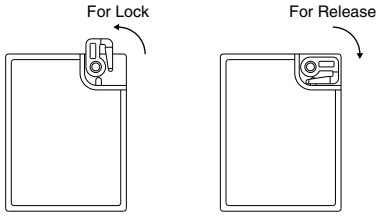

3) Do not use the test button for anything other than testing, such as when checking the circuit.

7. Diode characteristics

1) Reverse breakdown voltage: 1,000 V
2) Forward current: 1 A

8. Diode and CR built-in type

Since the diode and CR inside the relay coil are designed to absorb the counter emf, the element may be damaged if a large surge, etc., is applied to the diode and CR. If there is the possibility of a large surge voltage from the outside, please implement measures to absorb it.

9. Please connect DC coil types with LED and built-in diode correctly by verifying the coil polarity ("+" and "–"). Connecting with reverse polarity will cause the LED not to light and damage the built-in diode due to its specification.

© Panasonic Corporation 2014

ACCESSORIES

HJ RELAYS
(Sockets and DIN rail terminal sockets)

TYPES

1. Sockets (HC sockets)

Type	No. of poles	Product name	Part No.	Standard packing	
				Carton	Case
Plug-in socket	2-pole	HC2-socket (for HJ relay)	HC2-SS-K-H105	10 pcs.	100 pcs.
	2/4-pole (common)	HC4-socket (for HJ relay)	HC4-SS-K-H105		
PC board socket	2-pole	HC2-PC board socket (for HJ relay)	HC2-PS-K-H105		
	2/4-pole (common)	HC4-PC board socket (for HJ relay)	HC4-PS-K-H105		

Notes: 1. Use the hold-down clip that is shipped with the terminal socket or socket.
2. DIN rail terminal sockets conform to UL/C-UL and TÜV, as standard. Sockets conform to UL and CSA, as standard.
3. In order to prevent breakage and disfiguring, the screw tightening torque for the terminal socket should be within the range of 0.49 to 0.69 N·m (5 to 7 kgf·cm).
4. When attaching directly to a chassis, please use an M4 × 10 metric coarse screw thread, a spring washer, and a hexagonal nut.
5. For S1DX/S1DXM timer, use the leaf holding clip (Part No. ADX18012).

2. Terminal sockets (HJ terminal sockets)

Type	No. of poles	Product name	Part No.	Standard packing		Applicable HJ relay (Plug-in type)	
				Carton	Case	2 Form C	4 Form C
For DIN rail	2-pole	HJ2 terminal socket	HJ2-SFD	10 pcs.	100 pcs.	●	
		HJ2 terminal socket (Finger protect type)	HJ2-SFD-S			●	
	2/4-pole (common)	HJ4 terminal socket	HJ4-SFD			▲*1	●
		HJ4 terminal socket (Finger protect type)	HJ4-SFD-S			▲*1	●

*1 When using 2/4-pole common type, please use within a range that dose not exceed the max. continuous current (5A)

3. Terminal sockets (HC terminal sockets)

Type	No. of poles	Product name	Part No.	Standard packing		Applicable HJ relay (Plug-in type)	
				Carton	Case	2 Form C	4 Form C
For DIN rail	2-pole	HC2-slim type DIN terminal socket	HC2-SFD-S	20 pcs.	100 pcs.	●	
	2/3-pole (common)	HC3-DIN terminal socket	HC3-SFD-K	5 pcs.	50 pcs.	●	
	1/2/4-pole (common)	HC vertical terminal socket	HC4-TSF-K			●	●

Note: 1. For rating of HC terminal sockets, please refer to page 52.

RATING

Specifications (Sockets and terminal sockets)

Item		Performance							
Type		For HC2/HJ Plug in terminal socket	For HC2/HJ PC board socket	HJ2 terminal socket	HJ2 terminal socket (Finger protect type)	For HC4/HJ Plug in terminal socket	For HC4/HJ PC board socket	HJ4 terminal socket	HJ4 terminal socket (Finger protect type)
Contact arrangement		2 Form C (2-pole)				4 Form C (2/4-pole common)			
Max. continuous current (Ambient temperature: -40/-50 to +70°C -40/-58 to +158°F)		7A	7A	7A	7A	5A	5A	5A	5A
Breakdown voltage (Initial)	Between open contacts	2, 000 Vrms for 1 min. (Detection current: 10mA)							
	Between contact sets								
	Between contact and coil								
Initial insulation resistance		100 MΩ between each terminal (500V DC)							

Note: When using 2-pole of HJ relay (7A rating) on a 4 Form C socket and terminal socket that is 2/4-pole common, please use within a range that does not exceed the max. continuous current (5A).

© Panasonic Corporation 2014

DIMENSIONS (mm inch)

The CAD data of the products with a CAD Data mark can be downloaded from: http://industrial.panasonic.com/ac/e/

1. Plug-in socket

HC2 - Socket for HJ relay (HC2-SS-K-H105)

CAD Data

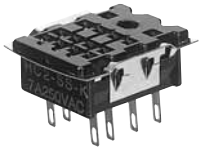

External dimensions

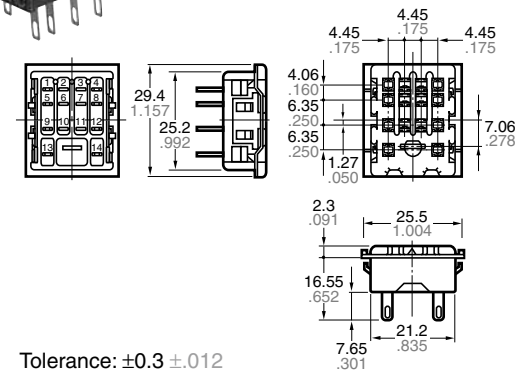

Tolerance: ±0.3 ±.012

HC4 - Socket for HJ relay (HC4-SS-K-H105)

CAD Data

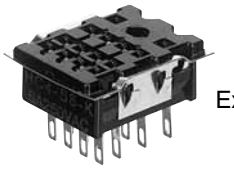

External dimensions

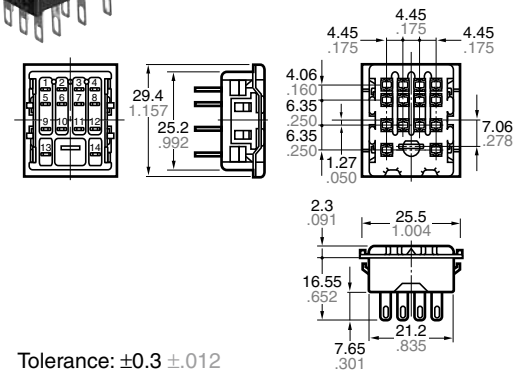

Tolerance: ±0.3 ±.012

Mounting hole diagram

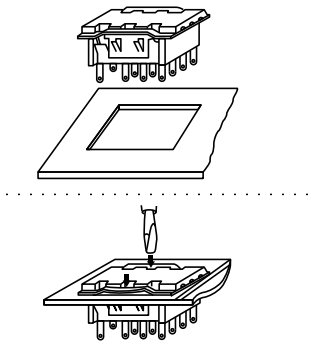

Chassis cutout (Side-by-side installation)

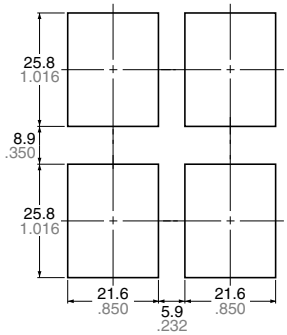

Tolerance: ±0.2 ±.008

Notes: 1. Applicable chassis board thickness is 1.0 to 2.0 mm.
2. Installation is easy by inserting the socket from the top into the holes and by depressing the two down arrows on the retention fitting from the front.

With a relay mounted (HC2-SS-K-H105)

Hold-down clip is packaged with the socket. (Same product as plug-in socket (Part No.: HC2-SS-K) for HC relay except that hold-down clip shape is different.)

2. PC board socket

HC2 - PC board socket for HJ relay (HC2-PS-K-H105)

CAD Data

External dimensions

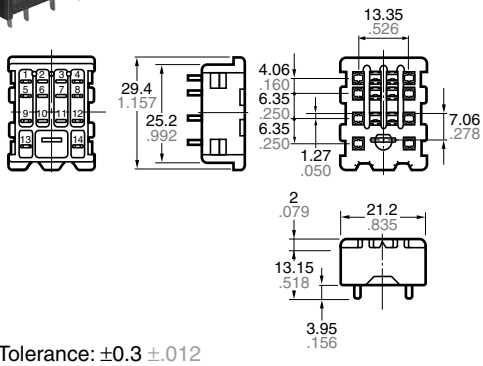

Tolerance: ±0.3 ±.012

HC4 - PC board socket for HJ relay (HC4-PS-K-H105)

CAD Data

External dimensions

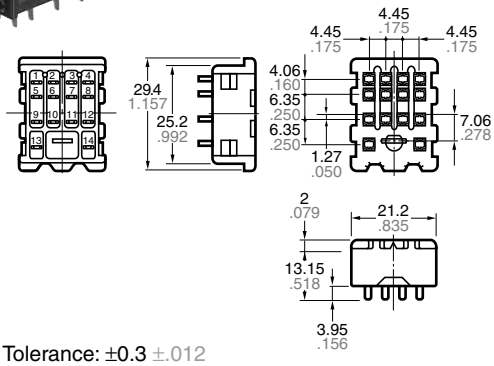

Tolerance: ±0.3 ±.012

© Panasonic Corporation 2014

PC board pattern (BOTTOM VIEW)

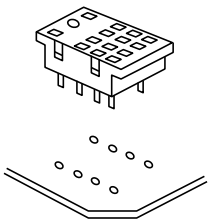

2 Form C

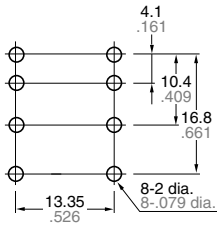

4 Form C

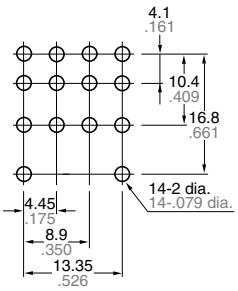

Chassis cutout (Side-by-side installation)

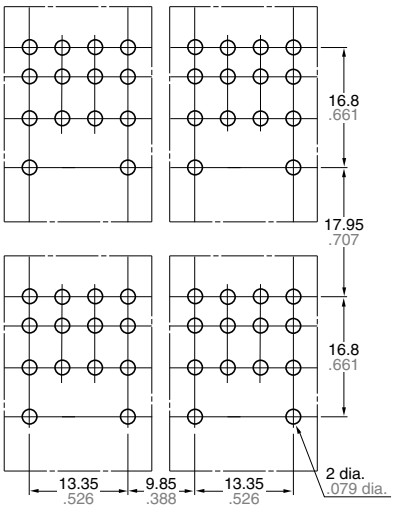

Tolerance: ±0.1 ±.004

With a relay mounted (HC2-PS-K-H105)

Hold-down clip is packaged with the socket. (Same product as PC board socket (Part No.: HC2-PS-K) for HC relay except that hold-down clip shape is different.)

3. Terminal socket

HJ2 terminal socket (HJ2-SFD)

CAD Data

External dimensions

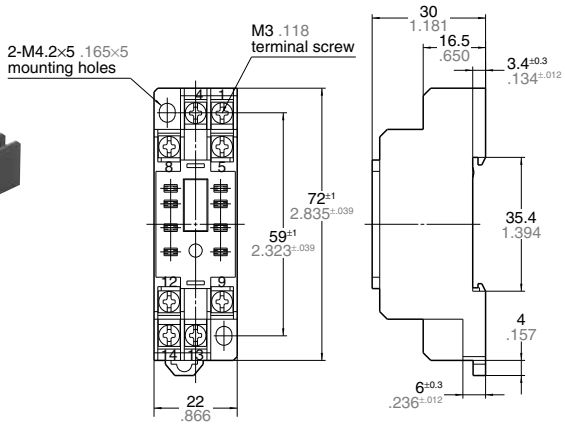

Schematic (Bottom view)

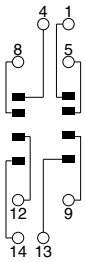

Mounting hole dimensions

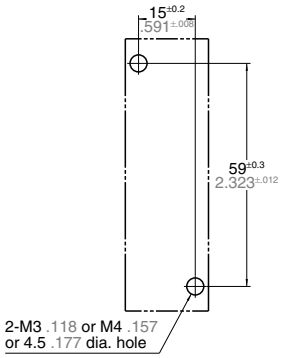

Note: Hold-down clip is packaged with the terminal socket.

General tolerance: ±0.5 ±.020

© Panasonic Corporation 2014

HJ2 terminal socket (Finger protect type) (HJ2-SFD-S)

CAD Data

External dimensions

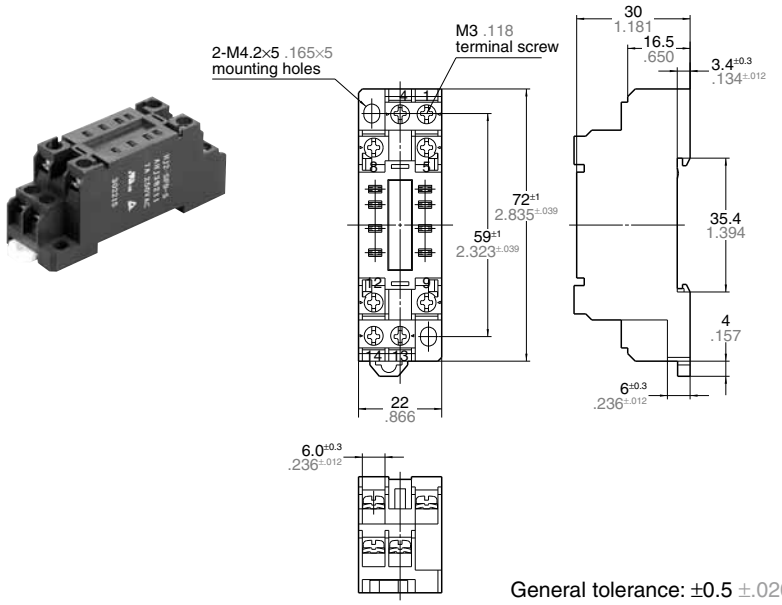

General tolerance: ±0.5 ±.020

Schematic (Bottom view)

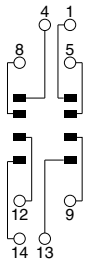

Mounting hole dimensions

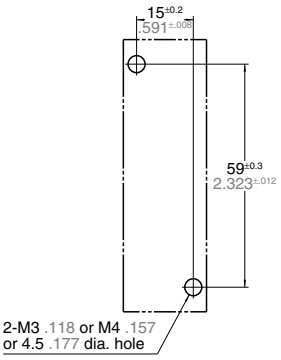

Notes: 1. Hold-down clip is packaged with the terminal socket.
2. Round type terminal is unable to attach.

HJ4 terminal socket (HJ4-SFD)

CAD Data

External dimensions

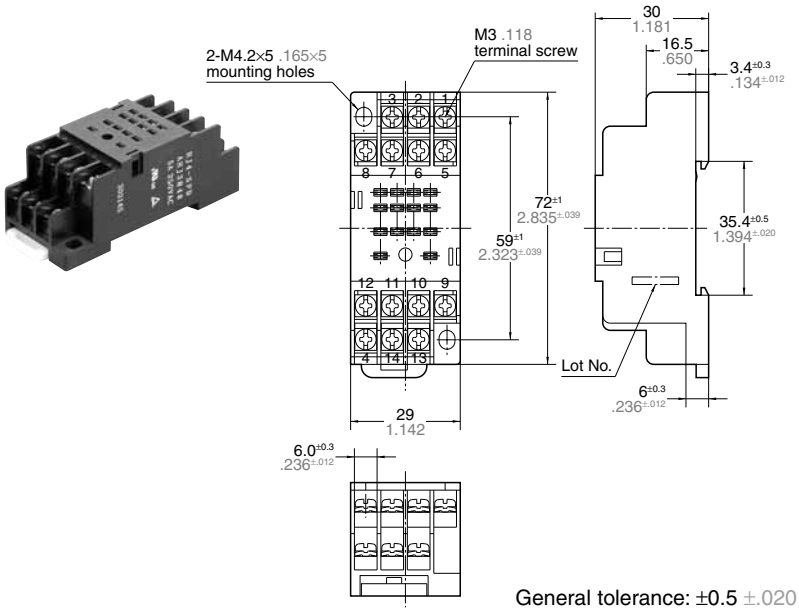

General tolerance: ±0.5 ±.020

Schematic (Bottom view)

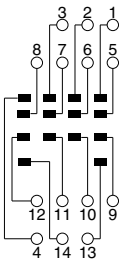

Mounting hole dimensions

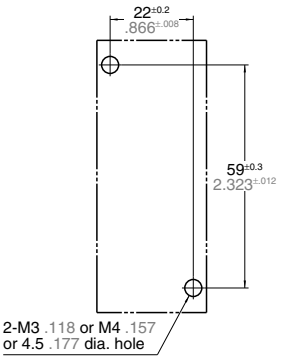

Note: Hold-down clip is packaged with the terminal socket.

© Panasonic Corporation 2014

HJ4 terminal socket (Finger protect type) (HJ4-SFD-S)

CAD Data

External dimensions

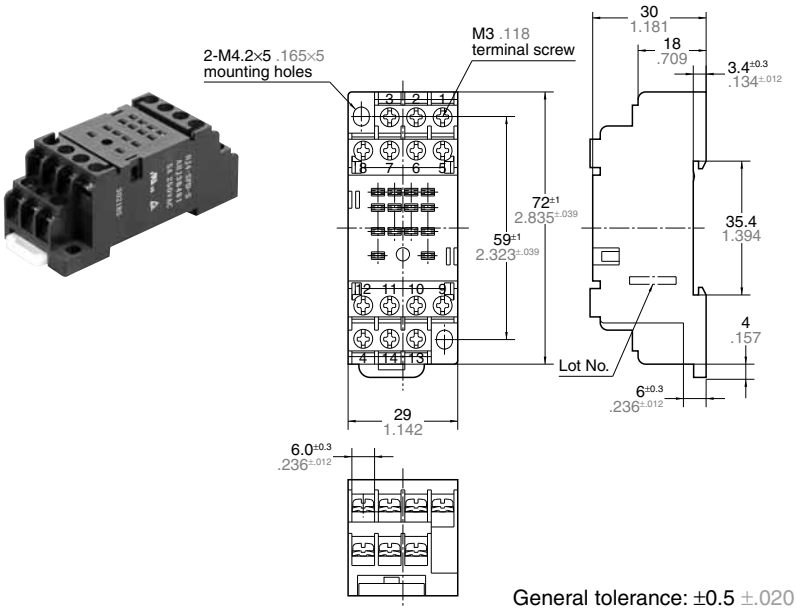

Schematic (Bottom view)

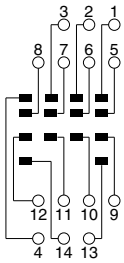

Mounting hole dimensions

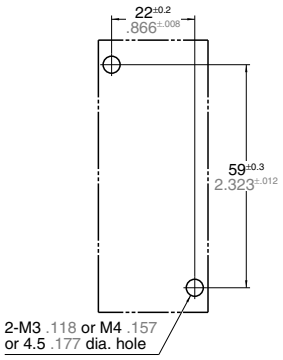

General tolerance: ±0.5 ±.020

Notes: 1. Hold-down clip is packaged with the terminal socket.
2. Round type terminal is unable to attach.

© Panasonic Corporation 2014