Product sheet

Automation Technology

Product	**Contacts: 5, cable outlet: 4-6 mm, cable plug connector, shieldable, screw terminal connection, static ring version with die-cast threaded ring, UL approval**
Area	**M12-A Series 713**
Article number	**99 1437 814 05**

Illustration

Scale drawing

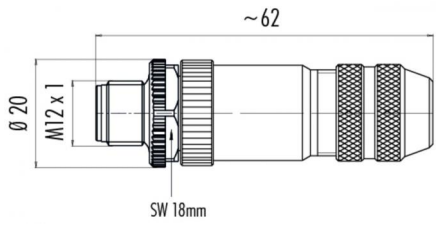

Contact Arrangement

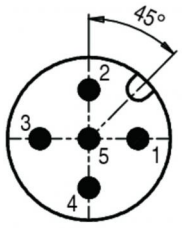

	X	Y
1	2,50	0,00
2	0,00	2,50
3	–2,50	0,00
4	0,00	–2,50
5	0,00	0,00

Attenuation characteristic

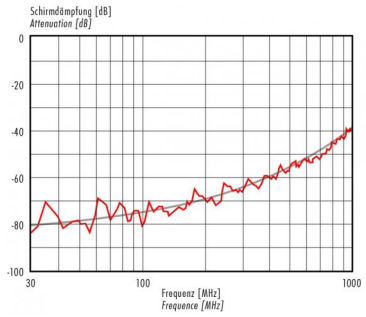

You can find the item description and assembly instruction on the next page.

Technical data

General features

Connector Design	Cable Connector
Connector locking system	bolted
Termination	screw
Wire gauge (mm)	0,75 mm²
Wire gauge (AWG)	18
Cable outlet	4 – 6 mm
Upper temperature	85 °C
Lower temperature	-40 °C

Cable data

Approval 1	UL

Electrical parameters

Rated voltage	60 V
Rated impulse voltage	1500 V
Pollution degree	3
Overvoltage category	II
Material group	II
Rated current (40°C)	4 A
Volume resistivity	≤ 3 mΩ
EMV compliance	shieldable
Degree of protection	IP67
Mechanical operation	> 100 Mating cycles

Material

Material of contact	CuZn (Messing)
Contact plating	Au (gold)
Material of contact body	PA

Product	**Contacts: 5, cable outlet: 4-6 mm, cable plug connector, shieldable, screw terminal connection, static ring version with die-cast threaded ring, UL approval**
Area	**M12-A Series 713**
Article number	**99 1437 814 05**

Item description

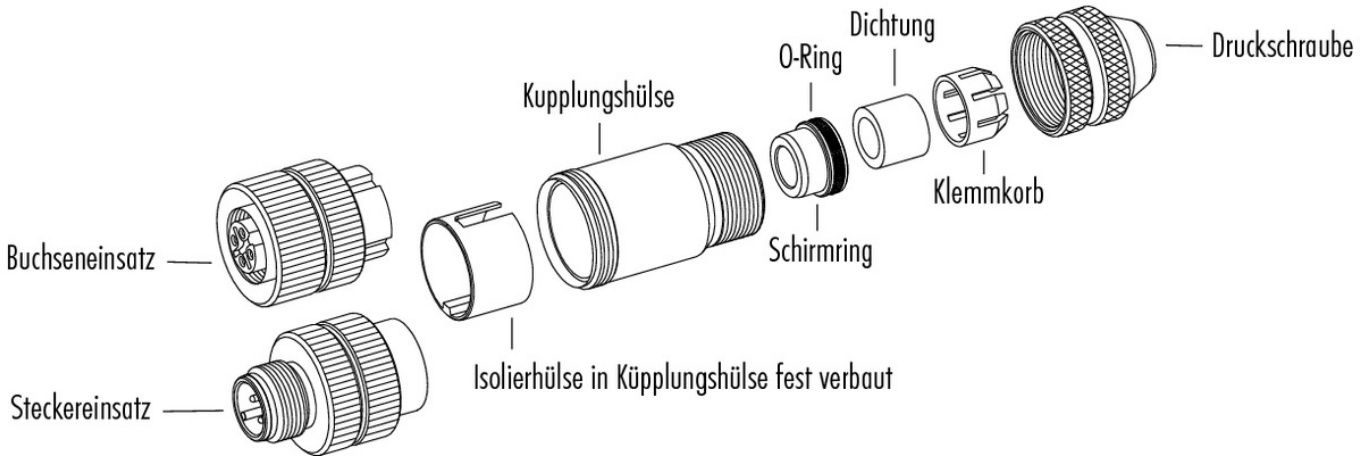

Installation instructions / Mounting cutout

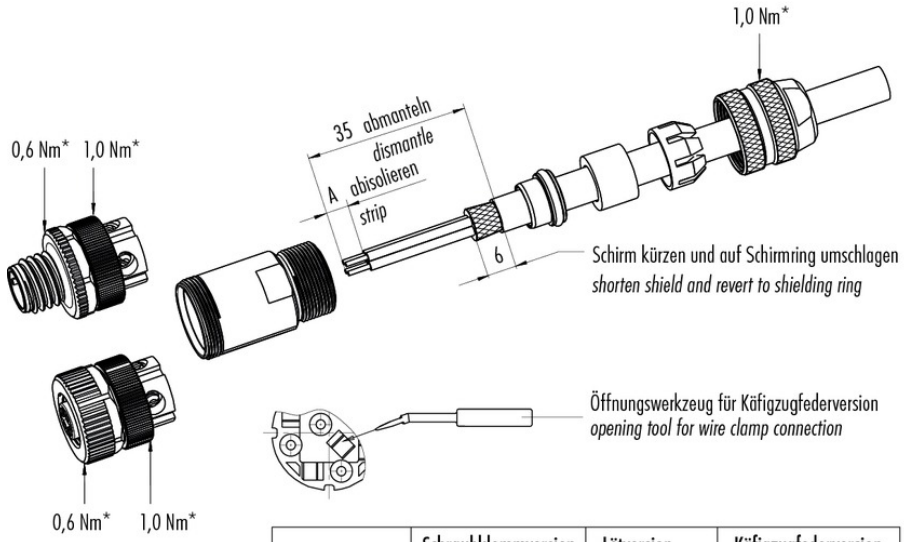

	Schraubklemmversion *screw connection*	Lötversion *solder version*	Käfigzugfederversion *wire clamp connection*
Maß A/mm *measure A/mm*	**4**	**3,5**	**7**

1. Teile auffädeln.
2. Abisolieren, Schirm kürzen und auf Schirmring umschlagen.
3. Litzen durch Gehäuse fädeln, Schirmring, Dichtring, Klemmkorb montieren. Druckschraube andrehen, um das Kabel zu fixieren. Litzen anschrauben.
4. Gehäuse mit Stecker- bzw. Buchseneinsatz verschrauben und Druckschraube festdrehen.

1. Bead parts.
2. Strip single cores, shorten shielding braid and revert to shielding ring.
3. Thread single wires through housing, mount shielding ring, seal and pinch ring. Turn on pressing screw to fix the cable. Screw on single wires.
4. Screw housing to male or female contact insert and fix pressing screw.

* Empfohlenes Anzugsdrehmoment
Recommended tightening moment